# User Guide

2.5 Gigabit PCIe Network Adapter
TX201

©2022 TP-Link 1910013261 REV1.0.0

# Contents

Chapter 1. About This Guide . . . . . 1

Chapter 2. Get to Know About Your Adapter . . . . . 2

1. 1. Product Overview . . . . . 3
1. 2. LED Status . . . . . 3

Chapter 3. Connect to a Computer . . . . . 4

Chapter 4. Install Driver . . . . . 6

Chapter 5. Appendix: Troubleshooting. . . . . 8

# About This Guide

This guide is a complement to Quick Installation Guide. The Quick Installation Guide instructs you on quick installation, and this guide provides the product overview and detailed instructions for each steps.

When using this guide, please notice that features available of the adapter may vary by model and software version. The adapter's availability may also vary by region or ISP. All images, steps, and descriptions in this guide are only examples and may not reflect your actual experience.

## Conventions

In this guide, the following conventions are used:

| Convention | Description |
|---|---|
| Teal Underline | Hyperlinks are in teal italic. You can click to redirect to a website or a specific section. |
| Teal | Contents to be emphasized and texts on the web page are in teal, including the menus, items, buttons, etc. |
| Note: | Ignoring this type of note might result in a malfunction or damage to the device. |
| Tips: | Indicates important information that helps you make better use of your device. |

- Maximum wired data throughput rates are the physical rates derived from IEEE Standard 802.3 specifications. Actual wired data throughput is not guaranteed and will vary as a result of environmental factors, Ethernet cable class, and computer performance.
- To ensure compatibility, you may need to update the adapter's drivers after an OS update. You can check the full list of OS support in the download center at tp-link.com/download-center.

## More Info

- The latest software can be found at https://www.tp-link.com/download-center.
- The Quick Installation Guide (QIG) can be found where you find this guide or inside the package of the product.
- Specifications can be found on the product page at https://www.tp-link.com.
- A TP-Link Community is provided for you to discuss our products at https://community.tp-link.com.
- Our Technical Support contact information can be found at the Contact Technical Support page at https://www.tp-link.com/support.

Chapter 1

# Get to Know About Your Adapter

This chapter introduces what the adapter can do and shows its appearance.

This chapter contains the following sections:


- Product Overview
- LED Status

## 1. 1. Product Overview

Combined with the latest 2.5GBase-T Technology, TX201 delivers extreme speeds of up to 2.5 Gbps, which is 2.5× faster than typical Gigabit adapters, guaranteeing smooth data transmissions for all your bandwidth-intensive tasks. This will lead you to a new era of 2.5 Gbps home networking.

With extreme speed and ultra-low latency, 2.5GBase-T is backwards compatible with Fast Ethernet and Gigabit Ethernet, automatically negotiating between higher and lower speed connections.

## 1. 2. LED Status

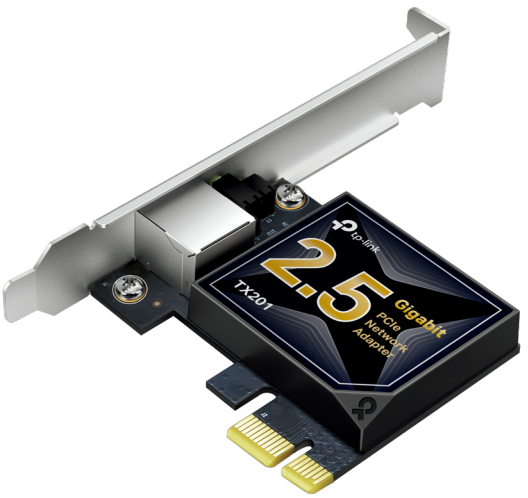


**LED Status:**

| LED | Status |
|---|---|
| 100M/10M Link | On: The adapter speed is negotiated to 100 Mbps/10 Mbps, but no data transmission.<br>Flashing: The adapter is working at 100 Mbps or 10 Mbps.<br>Off: No link or the adapter is working at a different speed. |
| 1000M Link | On: The adapter speed is negotiated to 1 Gbps, but no data transmission.<br>Flashing: The adapter is working at 1 Gbps.<br>Off: No link or the adapter is working at a different speed. |
| 2.5G Link | On: The adapter speed is negotiated to 2.5 Gbps, but no data transmission.<br>Flashing: The adapter is working at 2.5 Gbps.<br>Off: No link or the adapter is working at a different speed. |

Tips:
If neither LED flashes, check whether the adapter is detected by the computer or the driver is successfully installed.

Chapter 2

# Connect to a Computer

This chapter introduces how to connect the adapter to your computer.

Before you begin using your adapter, insert the adapter into your computer by following these steps.

1. Turn off the computer, unplug the power cable and remove the case panel.

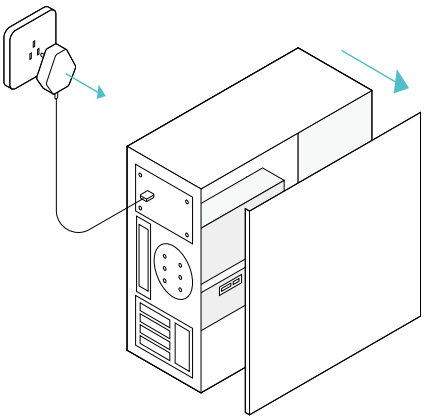

2. Locate an available PCI-E slot and carefully insert the adapter.

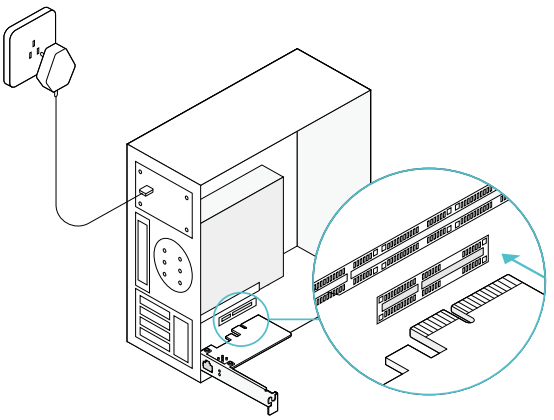

**Note:**
If the bracket is not suitable for your computer, detach it from the adapter's board and replace it with the low-profile bracket provided.

3. Replace the case panel, plug in the power cable and turn on your computer. Then connect the Ethernet cable to the adapter.

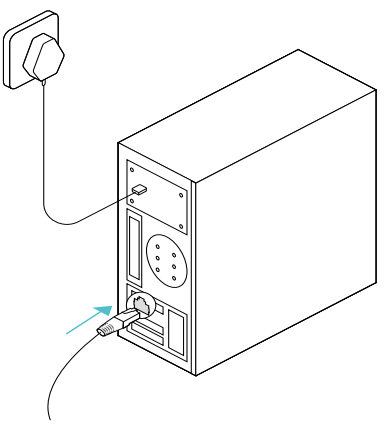

Chapter 3

# Install Driver

This chapter introduces how to install your adapter's driver in Windows system.

1. Insert the CD and run the **Autorun.exe**.

**Note:**

1. You can also download the driver or check the new release at https://www.tp-link.com/download-center
2. To install driver on Linux, refer to https://www.tp-link.com/faq-2868.html

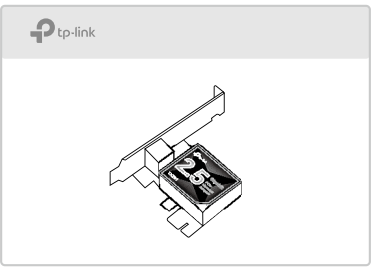


2. Select your adapter to start driver installation.
3. Follow the instructions to complete the installation.

# Appendix: Troubleshooting

## T1. What should I do if the adapter is not detected?

- You could find and download the driver at https://www.tp-link.com/download-center

## T2. How to find the hardware version of the adapter?

- The hardware version is printed on the product label on the package or the adapter. There is a character string "Ver:X.Y" (for example, Ver:2.0) in the Serial Number field, and the number X is the hardware version of the adapter.

- Visit https://www.tp-link.com/faq-46.html and follow the second method to find the hardware version of the adapter.

## T3. What should I do if PC cannot find the new hardware?

- Restart your computer and try again.
- Check if the network adapter is inserted in the PCI Express slot properly.
- Reinsert the adapter or try to change another PCI Express slot.
- Try inserting the adapter on a different computer.
- Make sure you meet the minimum system requirements for the adapter and that the latest Windows and system updates are installed on your computer.
- If the problem persists, contact our Technical Support.

## T4. How to check if I have installed the driver for my adapter successfully or not?

1. On your computer, please right click the Computer icon and go to Manage;

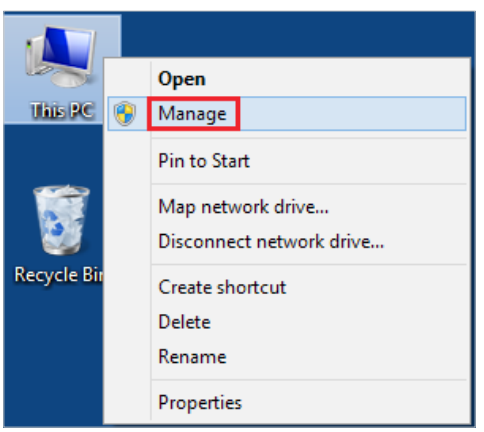

2. Open the Device Manager and go to Network adapters, and then find the corresponding TP-Link adapter, right click it and then go to Properties;

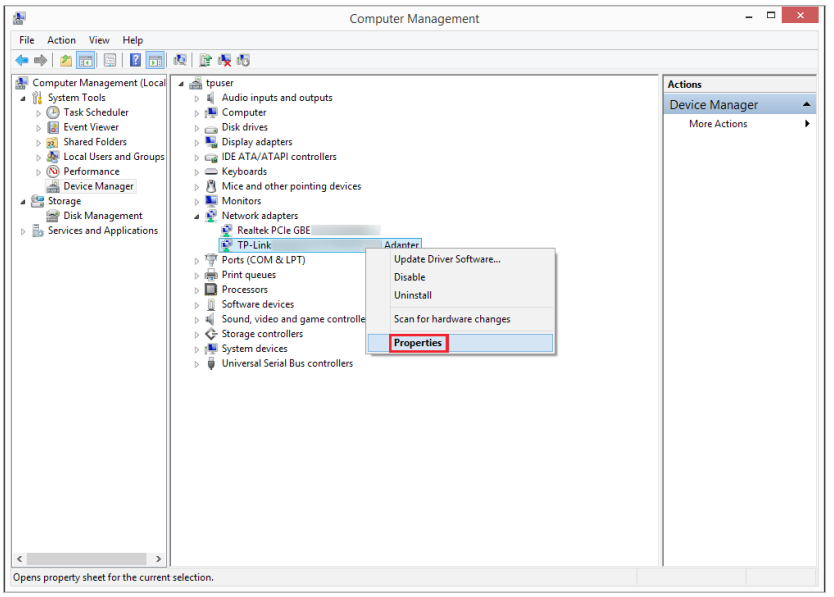


3. If you can see "This device is working properly." in the red box, you have already installed the driver successfully.

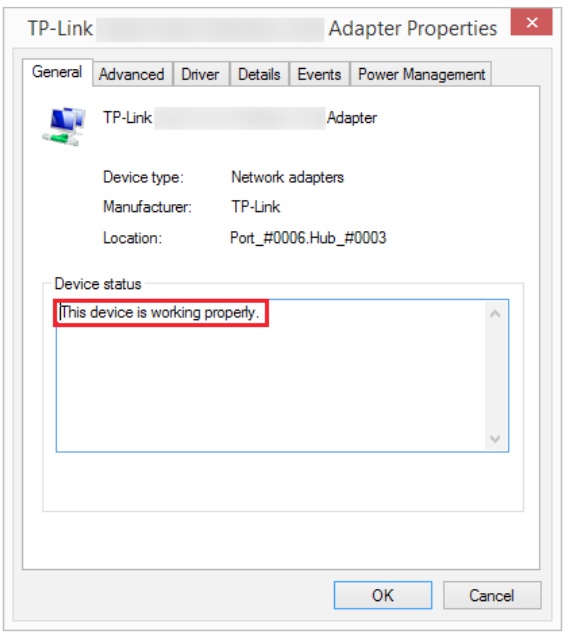

## FCC compliance information statement

**Product Name:** 2.5 Gigabit PCIe Network Adapter

**Model Number: TX201**

**Responsible party:**

**TP-Link USA Corporation**

Address: 10 Mauchly, Irvine, CA 92618

Website: http://www.tp-link.com/us/

Tel: +1 626 333 0234

Fax: +1 909 527 6804

E-mail: sales.usa@tp-link.comm

This equipment has been tested and found to comply with the limits for a Class B digital device, pursuant to part 15 of the FCC Rules. These limits are designed to provide reasonable protection against harmful interference in a residential installation. This equipment generates, uses and can radiate radio frequency energy and, if not installed and used in accordance with the instructions, may cause harmful interference to radio communications. However, there is no guarantee that interference will not occur in a particular installation. If this equipment does cause harmful interference to radio or television reception, which can be determined by turning the equipment off and on, the user is encouraged to try to correct the interference by one or more of the following measures:

- Reorient or relocate the receiving antenna.
- Increase the separation between the equipment and receiver.
- Connect the equipment into an outlet on a circuit different from that to which the receiver is connected.
- Consult the dealer or an experienced radio/ TV technician for help.

This device complies with part 15 of the FCC Rules. Operation is subject to the following two conditions:

1 ) This device may not cause harmful interference.

2 ) This device must accept any interference received, including interference that may cause undesired operation.

Any changes or modifications not expressly approved by the party responsible for compliance could void the user's authority to operate the equipment.

We, **TP-Link USA Corporation**, has determined that the equipment shown as above has been shown to comply with the applicable technical standards, FCC part 15. There is no unauthorized change is made in the equipment and the equipment is properly maintained and operated.

Issue Date: 2022.10.19

## CE Mark Warning

This is a class B product. In a domestic environment, this product may cause radio interference, in which case the user may be required to take adequate measures.

## EU declaration of conformity

TP-Link hereby declares that the device is in compliance with the essential requirements and other relevant provisions of directives 2014/30/EU, 2014/35/EU, 2011/65/EU and (EU)2015/863.
The original EU declaration of conformity may be found at
https://www.tp-link.com/en/support/ce/

TP-Link hereby declares that the device is in compliance with the essential requirements and other relevant provisions of the Electromagnetic Compatibility Regulations 2016 and Electrical Equipment (Safety) Regulations 2016.

The original UK declaration of conformity may be found at https://www.tp-link.com/support/ukca/

FR
ÉLÉMENTS D'EMBALLAGE À SÉPARER ET À DÉPOSER DANS LE BAC DE TRI
BAC DE TRI

## Canadian Compliance Statement

This device contains licence-exempt transmitter(s)/receiver(s) that comply with Innovation, Science and Economic Development Canada's licence-exempt RSS(s). Operation is subject to the following two conditions:

(1) This device may not cause interference.

(2) This device must accept any interference, including interference that may cause undesired operation of the device.

L'émetteur/récepteur exempt de licence contenu dans le présent appareil est conforme aux CNR d'Innovation, Sciences et Développement économique Canada applicables aux appareils radio exempts de licence. L'exploitation est autorisée aux deux conditions suivantes :

1) L'appareil ne doit pas produire de brouillage;

2) L'appareil doit accepter tout brouillage radioélectrique subi, même si le brouillage est susceptible d'en compromettre le fonctionnement.

## Industry Canada Statement

CAN ICES-3 (B)/NMB-3(B)

## BSMI Notice

### 安全諮詢及注意事項

- 請使用原裝電源供應器或只能按照本產品注明的電源類型使用本產品。
- 清潔本產品之前請先拔掉電源線。請勿使用液體、噴霧清潔劑或濕布進行清潔。
- 注意防潮，請勿將水或其他液體潑灑到本產品上。
- 插槽與開口供通風使用，以確保本產品的操作可靠並防止過熱，請勿堵塞或覆蓋開口。
- 請勿將本產品置放於靠近熱源的地方。除非有正常的通風，否則不可放在密閉位置中。
- 不要私自拆開機殼或自行維修，如產品有故障請與原廠或代理商聯繫。

### 限用物質含有情況標示聲明書

| 設備名稱：<br>Equipment name<br>2.5 Gigabit PCIe Network Adapter | | | | 型號（型式）：<br>Type designation (Type)<br>TX201 | | |
|---|---|---|---|---|---|---|
| 單元<br>Unit | 限用物質及其化學符號<br>Restricted substances and its chemical symbols | | | | | |
| | 鉛<br>Lead<br>(Pb) | 汞<br>Mercury<br>(Hg) | 鎘<br>Cadmium<br>(Cd) | 六價鉻<br>Hexavalent chromium<br>($Cr^{+6}$) | 多溴聯苯<br>Polybrominated biphenyls<br>(PBB) | 多溴二苯醚<br>Polybrominated diphenyl ethers<br>(PBDE) |
| PCB | ○ | ○ | ○ | ○ | ○ | ○ |
| 外殼 | ○ | ○ | ○ | ○ | ○ | ○ |

備考1.〝超出0.1 wt %〞及〝超出0.01 wt %〞係指限用物質之百分比含量超出百分比含量基準值

Note 1："Exceeding 0.1 wt %" and "exceeding 0.01 wt %" indicate that the percentage content of the restricted substance exceeds the reference percentage value of presence condition.

備考2.〝○〞係指該項限用物質之百分比含量未超出百分比含量基準值。

Note 2："○" indicates that the percentage content of the restricted substance does not exceed the percentage of reference value of presence.

備考3.〝－〞係指該項限用物質為排除項目。

Note 3：The "－" indicates that the restricted substance corresponds to the exemption.

Продукт сертифіковано згідно с правилами системи УкрСЕПРО на відповідність вимогам нормативних документів та вимогам, що передбачені чинними законодавчими актами України.

## Safety Information

- Keep the device away from water, fire, humidity or hot environments.
- Do not attempt to disassemble, repair, or modify the device. If you need service, please contact us.
- Operating Humidity: 10%~90%RH, Non-condensing
- Storage Humidity: 10%~90%RH, Non-condensing

Please read and follow the above safety information when operating the device. We cannot guarantee that no accidents or damage will occur due to improper use of the device. Please use this product with care and operate at your own risk.

## Explanations of the symbols on the product label

| Symbol | Explanation |
|---|---|
| | Indoor use only |
| | RECYCLING<br>This product bears the selective sorting symbol for Waste electrical and electronic equipment (WEEE). This means that this product must be handled pursuant to European directive 2012/19/EU in order to be recycled or dismantled to minimize its impact on the environment.<br>User has the choice to give his product to a competent recycling organization or to the retailer when he buys a new electrical or electronic equipment. |